AL-Tuwaijri

Altuwaijri Industrial Equipment co.

Model:
1044FB
Description:
DIAL INDICATOR

- Small diameter model for applications where space is limited.
- Hardened stainless steel plunger for durability.
- Rack gear is machine ground for a tighter fit and increased accuracy.

Type	Plunger
Dial Type	Continuous
Range	5mm (1mm)
Accuracy	±13µm
Graduation	0.01mm
Repeatability	5µm
Measuring Force	1.4N or less
Graduation	± 0-100

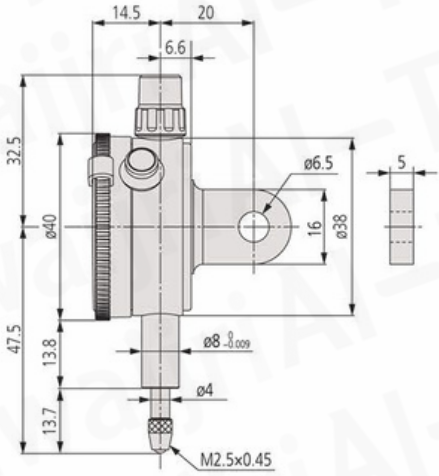

Code Reference: **MIT-0562**

Riyadh Branch
Tel.No+966 11 44 66 222
Email: trust@al-tuwaijri.com

Jeddah Branch
Tel.No +966 12 687 9999
Email: trust2@al-tuwaijri.com

Dammam Branch
Tel.No +966 13 838 8880
Email: trust3@al-tuwaijri.com